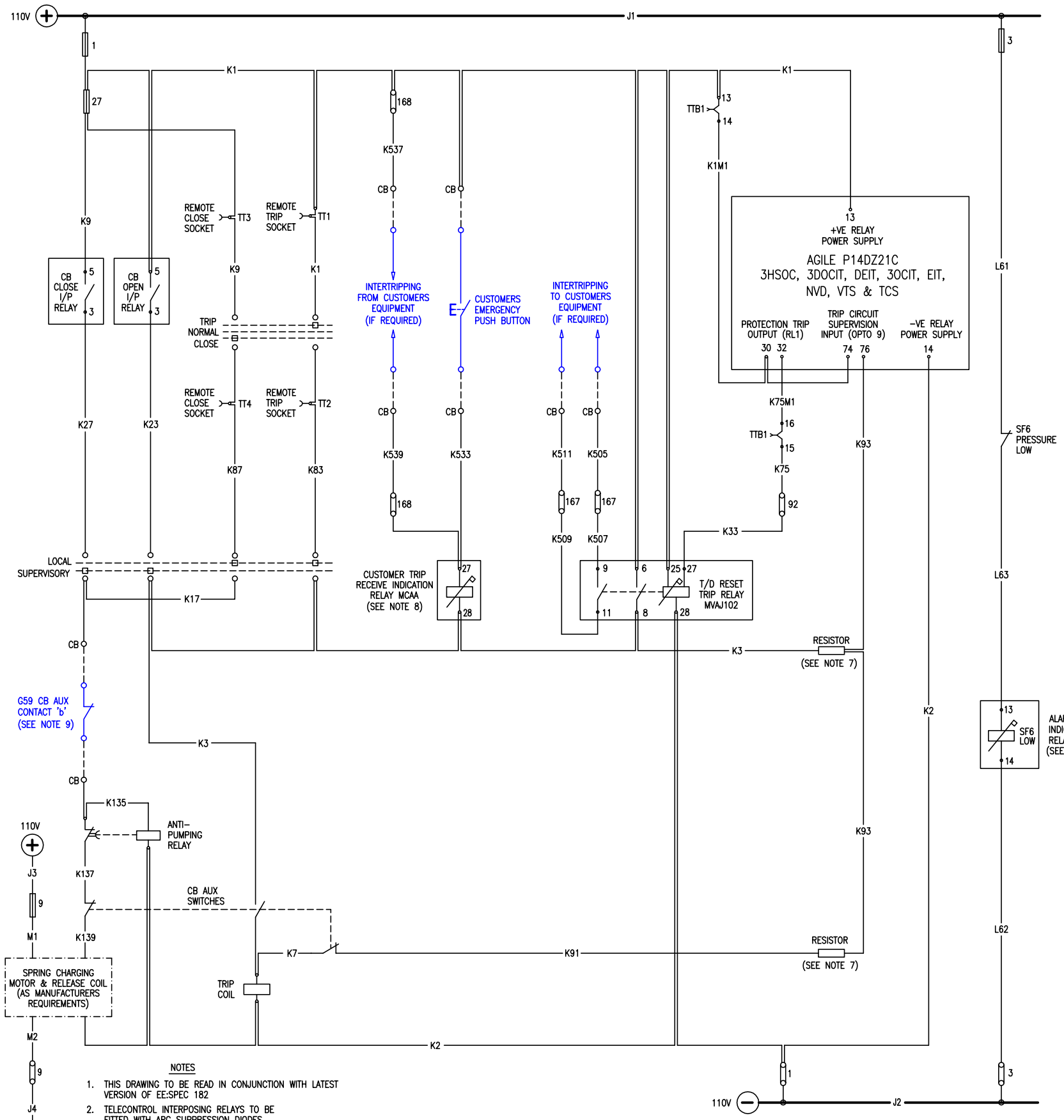

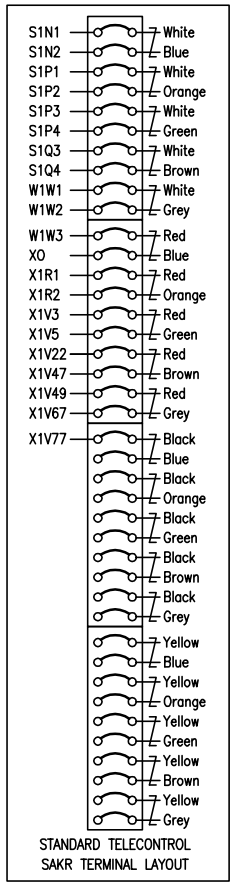

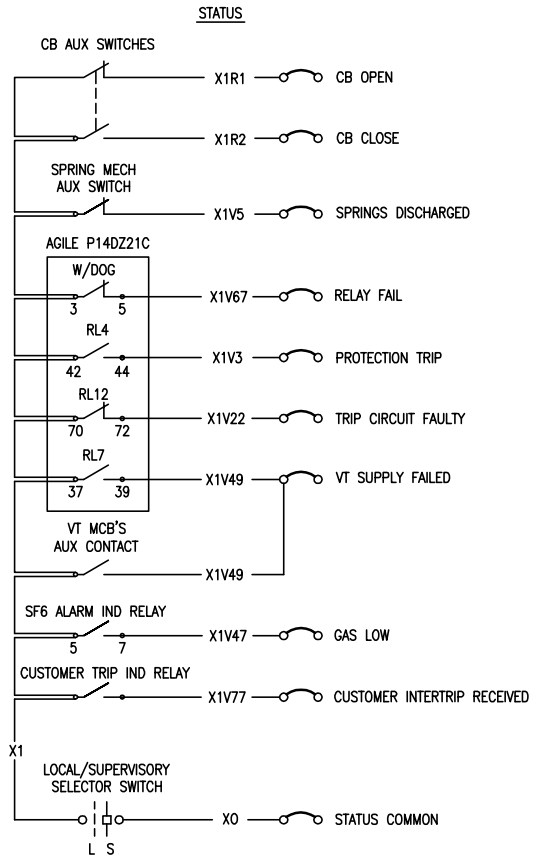

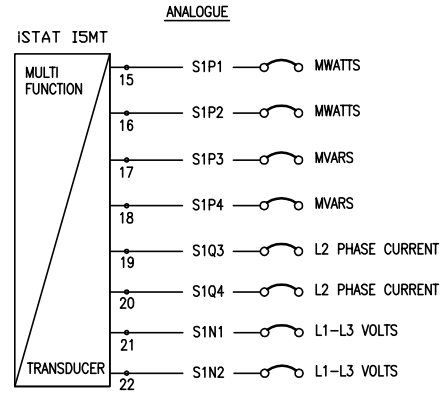

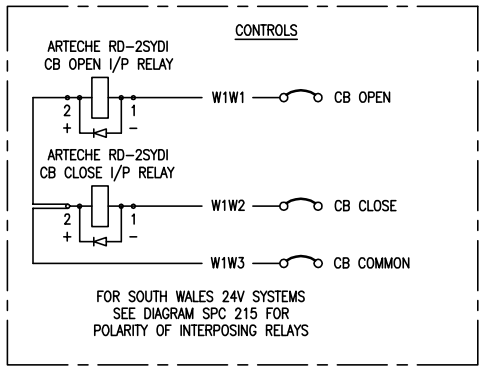

FUSE & LINK TABLE

REF	INSCRIPTION		FUSE	LINK
1	TRIP & CLOSE SUPPLY +VE	110V DC	16A	
1	TRIP & CLOSE SUPPLY -VE	110V DC		LINK
27	CLOSING	110V DC	6A	
92	PROTECTION TRIP ISOLATION	110V DC		LINK
168	CUSTOMER INTERTRIP RECEIVE ISOLATION	110V DC		LINK
168	CUSTOMER INTERTRIP RECEIVE ISOLATION	110V DC		LINK
# 167	CUSTOMER INTERTRIP SEND ISOLATION	110V DC		LINK
# 167	CUSTOMER INTERTRIP SEND ISOLATION	110V DC		LINK
3	SF6 GAS PRESSURE LOW ALARM SUPPLY +VE	110V DC	2A	
3	SF6 GAS PRESSURE LOW ALARM SUPPLY -VE	110V DC		LINK
9	SPRING MOTOR SUPPLY +VE	110V DC	6A	
9	SPRING MOTOR SUPPLY -VE	110V DC		LINK

FUSE & LINK LABELLING TO BE RED LETTERING ON WHITE BACKGROUND TO DENOTE TRIPPING TO OTHER PANELS.

NOTES

1. THIS DRAWING TO BE READ IN CONJUNCTION WITH LATEST VERSION OF EE:SPEC 182
2. TELECONTROL INTERPOSING RELAYS TO BE FITTED WITH ARC SUPPRESSION DIODES
3. SPRING CHARGING MOTOR SUPPLY TO BE DERIVED FROM A SEPARATE SOURCE OF SUPPLY
4. SF6 LOW ALARM REQUIRED WHEN CB UTILISES SF6 GAS. A PROGRAMMABLE LED & ALARM ON THE PROTECTION DEVICE MAY ALSO BE USED FOR THIS FUNCTION
5. WHERE SF6 IS THE INTERUPTING MEDIUM, SEEK GUIDANCE FROM WPD POLICY TEAM ON CB LOCKOUT/TRIP FUNCTIONS
6. K1 & K3 WIRED TO ALLOW TRIP CIRCUIT SUPERVISION TO MONITOR ALL LOOPS TO CIRCUIT BREAKER TRIP COIL
7. TCS RESISTOR VALUES DEPENDANT ON TRIP COIL
8. THE MCAA RELAY SHOULD BE SELECTED TO ENSURE CORRECT OPERATION WITH THE CB TRIP COIL/ACTUATOR. AN APPROPRIATE MCAA11 OR MCAA12 (S/R CONTACTS) MAY BE USED.
9. A CLOSE INHIBIT CONTACT MAY BE REQUIRED FOR GENERATION CONNECTIONS FROM THE CUSTOMERS G59 CB
10. DRAWING SHOWN WITH SUPPLIES OFF, CB OPEN, SPRINGS DISCHARGED & SF6 LOW

Rev No	Drawn	Chk'd	App'd	Date	Revision

ORIGINAL ISSUE		Date
Drawn	CM	13/11/17
Checked		
Approved		
SCALE: NTS		

WESTERN POWER DISTRIBUTION
Design Department.
Avonbank, Feeder Road, Bristol BS2 0TB
Tel: 0117 933 2000 Fax: 0117 933 2001.

Title: DC PROTECTION FOR 36kV INCOMING CIRCUIT WITH METERING (1250A BUSBARS)

Drg. No. SPC36C11A-DC

Rev No.